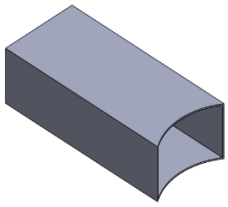	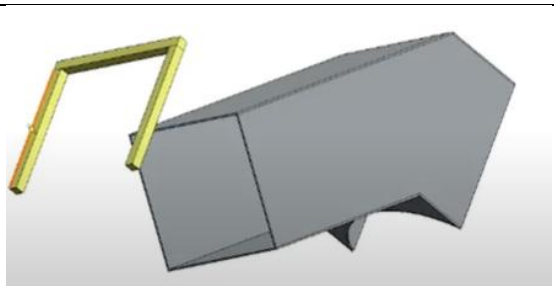
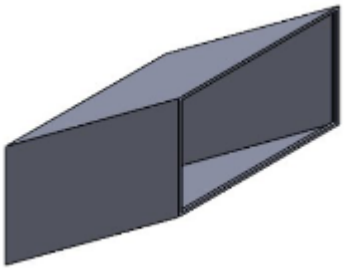	
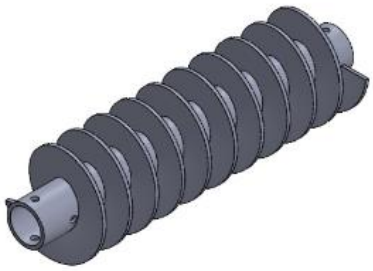	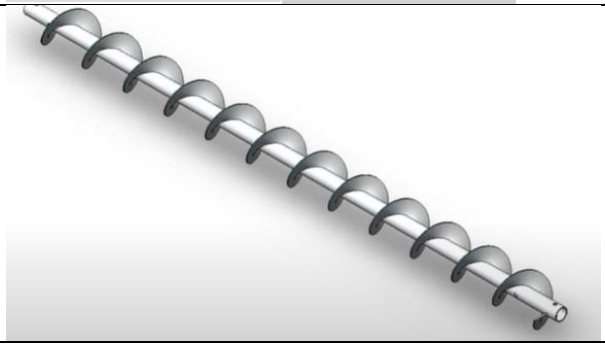

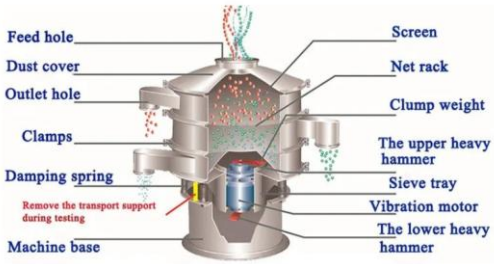
Feed hole
Dust cover
Outlet hole
Clamps
Damping spring
Remove the transport support during testing
Machine base
Screen
Net rack
Clump weight
The upper heavy hammer
Sieve tray
Vibration motor
The lower heavy hammer

Damping springs

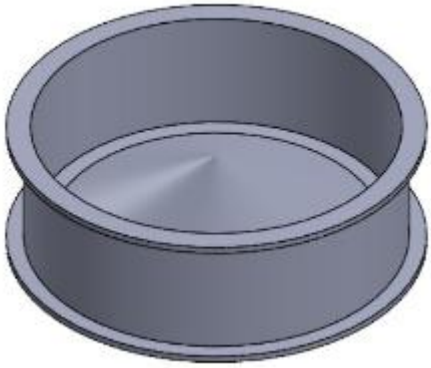

Drive base with motor

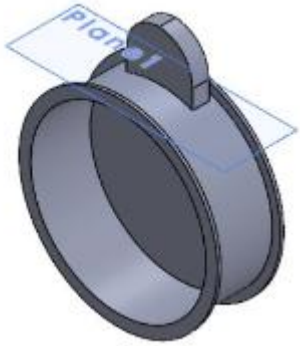
Plane1

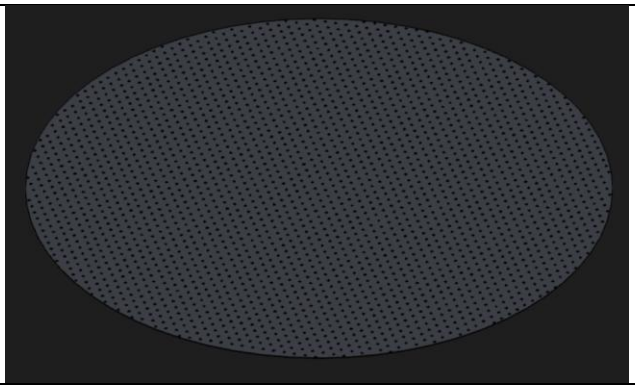

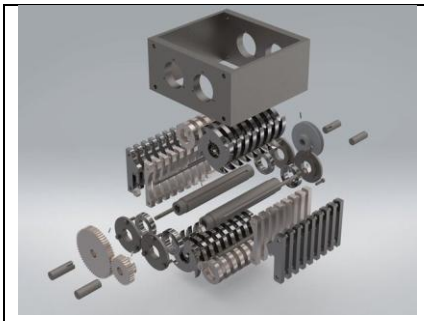

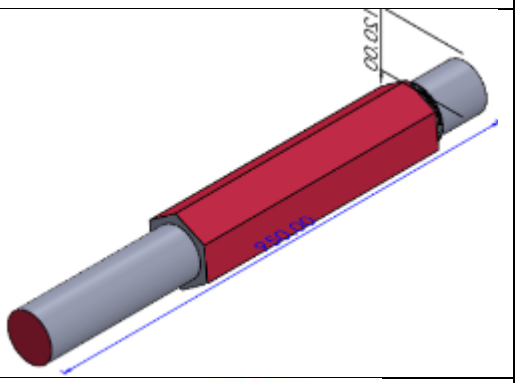
30.00
90.00

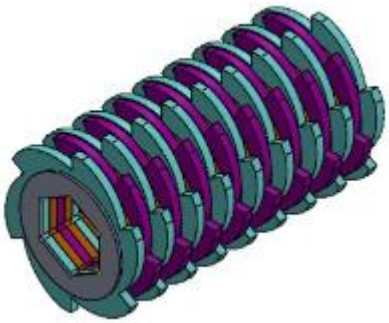

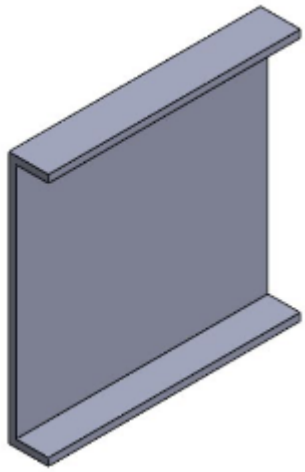

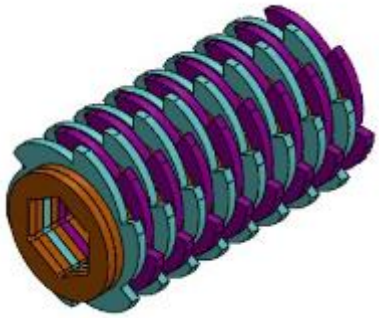

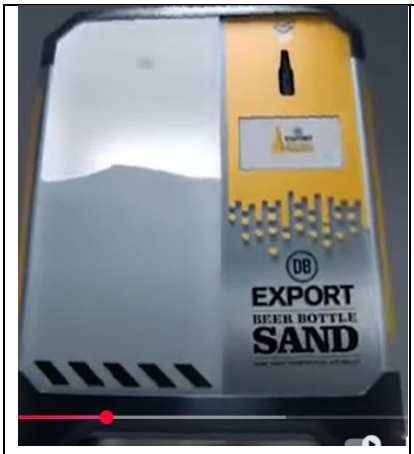
DB
EXPORT
BEER BOTTLE
SAND